Cambridge International **A Level**

Cambridge International Examinations
Cambridge International Advanced Level

CANDIDATE NAME

CENTRE NUMBER

CANDIDATE NUMBER

4388315613

PHYSICS **9702/43**

Paper 4 A2 Structured Questions **May/June 2015**

2 hours

Candidates answer on the Question Paper.

No Additional Materials are required.

READ THESE INSTRUCTIONS FIRST

Write your Centre number, candidate number and name on all the work you hand in.
Write in dark blue or black pen.
You may use an HB pencil for any diagrams or graphs.
Do not use staples, paper clips, glue or correction fluid.
DO **NOT** WRITE IN ANY BARCODES.

Answer **all** questions.

Electronic calculators may be used.
You may lose marks if you do not show your working or if you do not use appropriate units.

At the end of the examination, fasten all your work securely together.
The number of marks is given in brackets [ ] at the end of each question or part question.

For Examiner's Use	
1	
2	
3	
4	
5	
6	
7	
8	
9	
10	
11	
12	
13	
Total	

This document consists of **23** printed pages and **1** blank page.

DC (LK/CGW) 109959
© UCLES 2015

CAMBRIDGE International Examinations

Data

speed of light in free space, $c = 3.00 \times 10^{8}\ \text{m s}^{-1}$

permeability of free space, $\mu_0 = 4\pi \times 10^{-7}\ \text{H m}^{-1}$

permittivity of free space, $\varepsilon_0 = 8.85 \times 10^{-12}\ \text{F m}^{-1}$

$$\left(\frac{1}{4\pi\varepsilon_0} = 8.99 \times 10^{9}\ \text{m F}^{-1}\right)$$

elementary charge, $e = 1.60 \times 10^{-19}\ \text{C}$

the Planck constant, $h = 6.63 \times 10^{-34}\ \text{J s}$

unified atomic mass constant, $u = 1.66 \times 10^{-27}\ \text{kg}$

rest mass of electron, $m_e = 9.11 \times 10^{-31}\ \text{kg}$

rest mass of proton, $m_p = 1.67 \times 10^{-27}\ \text{kg}$

molar gas constant, $R = 8.31\ \text{J K}^{-1}\ \text{mol}^{-1}$

the Avogadro constant, $N_A = 6.02 \times 10^{23}\ \text{mol}^{-1}$

the Boltzmann constant, $k = 1.38 \times 10^{-23}\ \text{J K}^{-1}$

gravitational constant, $G = 6.67 \times 10^{-11}\ \text{N m}^2\ \text{kg}^{-2}$

acceleration of free fall, $g = 9.81\ \text{m s}^{-2}$

© UCLES 2015

Formulae

uniformly accelerated motion, $s = ut + \frac{1}{2}at^2$
$v^2 = u^2 + 2as$

work done on/by a gas, $W = p\Delta V$

gravitational potential, $\phi = -\frac{Gm}{r}$

hydrostatic pressure, $p = \rho gh$

pressure of an ideal gas, $p = \frac{1}{3}\frac{Nm}{V}\langle c^2 \rangle$

simple harmonic motion, $a = -\omega^2 x$

velocity of particle in s.h.m., $v = v_0 \cos \omega t$
$v = \pm \omega \sqrt{(x_0^2 - x^2)}$

electric potential, $V = \frac{Q}{4\pi\varepsilon_0 r}$

capacitors in series, $1/C = 1/C_1 + 1/C_2 + \ldots$

capacitors in parallel, $C = C_1 + C_2 + \ldots$

energy of charged capacitor, $W = \frac{1}{2}QV$

resistors in series, $R = R_1 + R_2 + \ldots$

resistors in parallel, $1/R = 1/R_1 + 1/R_2 + \ldots$

alternating current/voltage, $x = x_0 \sin \omega t$

radioactive decay, $x = x_0 \exp(-\lambda t)$

decay constant, $\lambda = \frac{0.693}{t_{\frac{1}{2}}}$

© UCLES 2015

[Turn over

Section A

Answer **all** the questions in the spaces provided.

1 **(a)** State Newton's law of gravitation.

.....

.....

..... [2]

(b) The planet Neptune has eight moons (satellites). Each moon orbits Neptune in a circular path of radius r with a period T.

Assuming that Neptune and each moon behave as point masses, show that r and T are related by the expression

$$GM_N = \frac{4\pi^2 r^3}{T^2}$$

where G is the gravitational constant and M_N is the mass of Neptune.

[3]

(c) Data for the moon Triton that orbits Neptune and for the moon Oberon that orbits the planet Uranus are given in Fig. 1.1.

planet	moon	radius of orbit $r/10^5$ km	period of orbit T/days
Neptune	Triton	3.55	5.9
Uranus	Oberon	5.83	13.5

Fig. 1.1

© UCLES 2015

Use the expression in **(b)** to determine the ratio

$$\frac{\text{mass of Neptune}}{\text{mass of Uranus}}.$$

ratio = ... [3]

2 **(a)** State what is meant by *internal energy*.

.....

.....

..... [2]

(b) The variation with volume V of the pressure p of an ideal gas as it undergoes a cycle ABCA of changes is shown in Fig. 2.1.

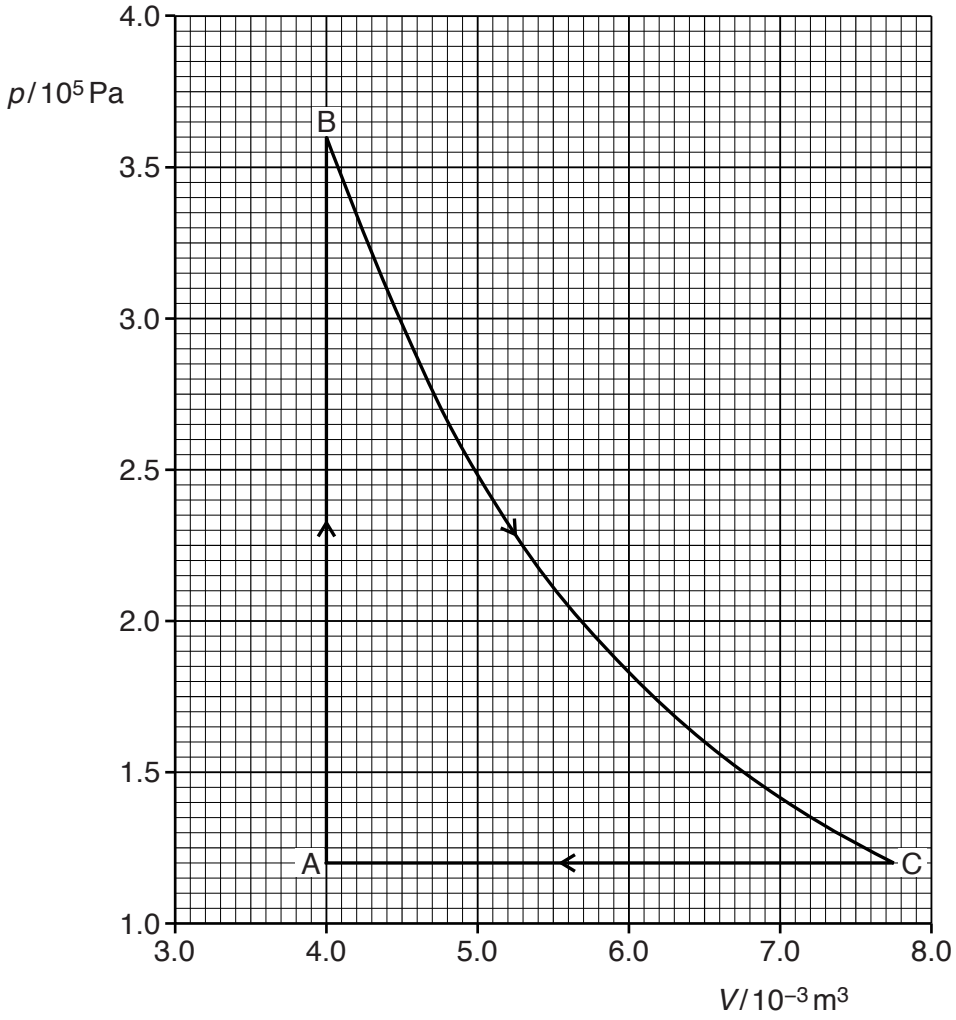

Fig. 2.1

The temperature of the gas at A is 290 K. The temperature at B is 870 K.

Determine

(i) the amount, in mol, of gas,

amount = ... mol [2]

(ii) the temperature of the gas at C.

temperature = ... K [2]

(c) Explain why the change from C to A involves external work and a change in internal energy.

.....

.....

..... [2]

3 **(a)** Define *specific latent heat*.

.....

.....

.....

..... [2]

(b) An electrical heater is immersed in some melting ice that is contained in a funnel, as shown in Fig. 3.1.

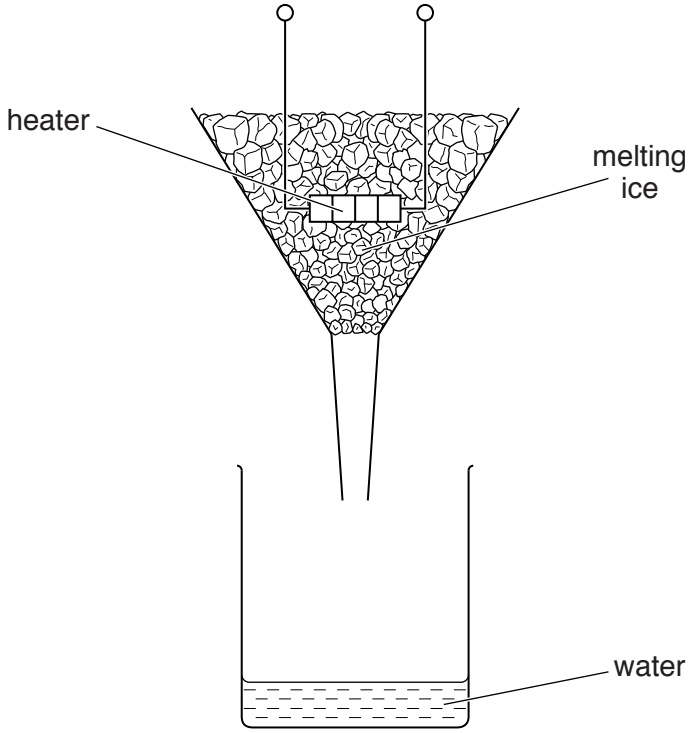

Fig. 3.1

The heater is switched on and, when the ice is melting at a constant rate, the mass *m* of ice melted in 5.0 minutes is noted, together with the power *P* of the heater. The power *P* of the heater is then increased. A new reading for the mass *m* of ice melted in 5.0 minutes is recorded when the ice is melting at a constant rate.

Data for the power *P* and the mass *m* are shown in Fig. 3.2.

power of heater P/ W	mass m melted in 5.0 minutes/ g	mass m melted per second/ g s^{-1}
70	78	.....
110	114	.....

Fig. 3.2

(i) Complete Fig. 3.2 to determine the mass melted per second for each power of the heater. [2]

(ii) Use the data in the completed Fig. 3.2 to determine

1. a value for the specific latent heat of fusion L of ice,

L = ... $J\,g^{-1}$ [3]

2. the rate h of thermal energy gained by the ice from the surroundings.

h = ... W [2]

BLANK PAGE

© UCLES 2015

4 **(a)** For an oscillating body, state what is meant by

(i) forced frequency,

.....

..... [1]

(ii) natural frequency of vibration,

.....

..... [1]

(iii) resonance.

.....

.....

..... [2]

(b) State and explain one situation where resonance is useful.

.....

.....

.....

..... [2]

(c) In some situations, resonance should be avoided.

State one such situation and suggest how the effects of resonance are reduced.

.....

.....

.....

..... [2]

5 A charged metal sphere is isolated in space. Measurements of the electric potential V are made for different distances x from the centre of the sphere.

The variation with distance x of the potential V is shown in Fig. 5.1.

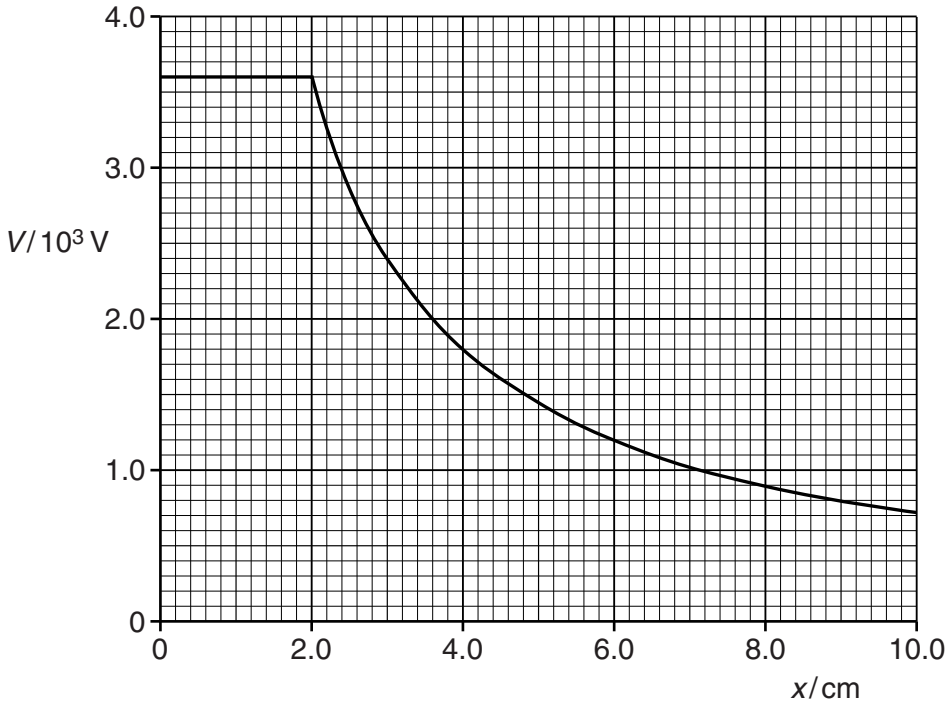

Fig. 5.1

(a) Use Fig. 5.1 to determine the electric field strength, in NC^{-1}, at a point where $x = 4.0\,cm$. Explain your working.

electric field strength = ... NC^{-1} [3]

(b) The charge on the sphere is $8.0 \times 10^{-9}\,C$.

(i) Use Fig. 5.1 to state the electric potential at the surface of the sphere.

potential = ... V [1]

(ii) The sphere acts as a capacitor. Determine the capacitance of the sphere.

capacitance = ... F [2]

6 **(a)** State the type of field, or fields, that may cause a force to be exerted on a particle that is

(i) uncharged and moving,

..... [1]

(ii) charged and stationary,

..... [1]

(iii) charged and moving at right-angles to the field.

..... [2]

(b) A particle X has mass 3.32×10^{-26} kg and charge $+1.60 \times 10^{-19}$ C.

The particle is travelling in a vacuum with speed $7.60 \times 10^{4}\,\text{m s}^{-1}$. It enters a region of uniform magnetic field that is normal to the direction of travel of the particle. The particle travels in a semicircle of diameter 12.2 cm, as shown in Fig. 6.1.

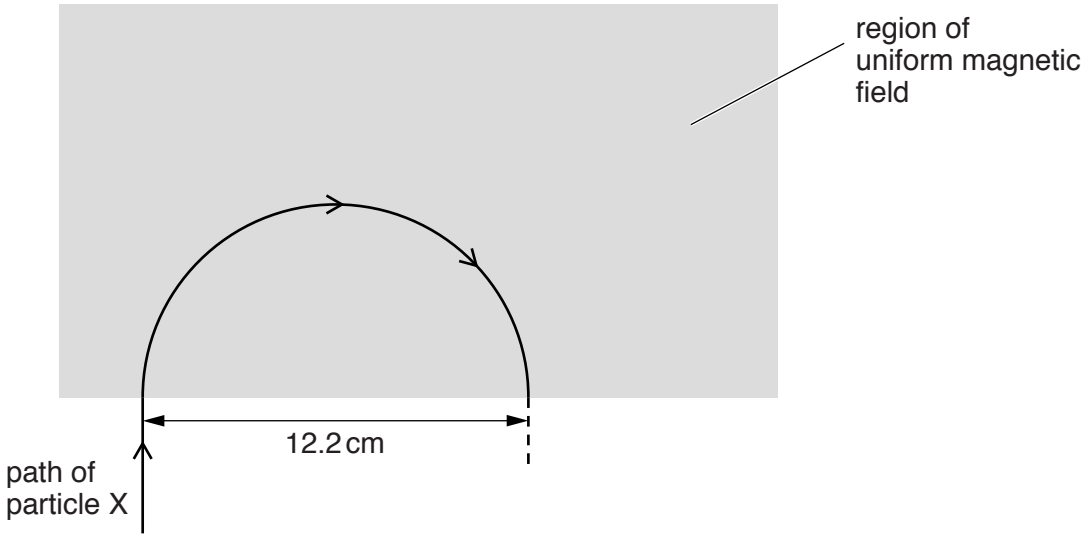

Fig. 6.1

For the uniform magnetic field,

(i) state its direction,

.....

..... [1]

(ii) calculate the magnetic flux density.

magnetic flux density = ... T [3]

(c) A second particle Y has mass less than that of particle X in **(b)** and the same charge.

It enters the region of uniform magnetic field in **(b)** with the same speed and along the same initial path as particle X.

On Fig. 6.1, draw the path of particle Y in the region of the magnetic field. [1]

7 In many distribution systems for electrical energy, the energy is transmitted using alternating current at high voltages.

Suggest and explain an advantage, one in each case, for the use of

(a) alternating voltages,

.....

.....

.....

..... [2]

(b) high voltages.

.....

.....

.....

..... [2]

8 A photon of wavelength 6.50×10^{-12} m is incident on an isolated stationary electron, as illustrated in Fig. 8.1.

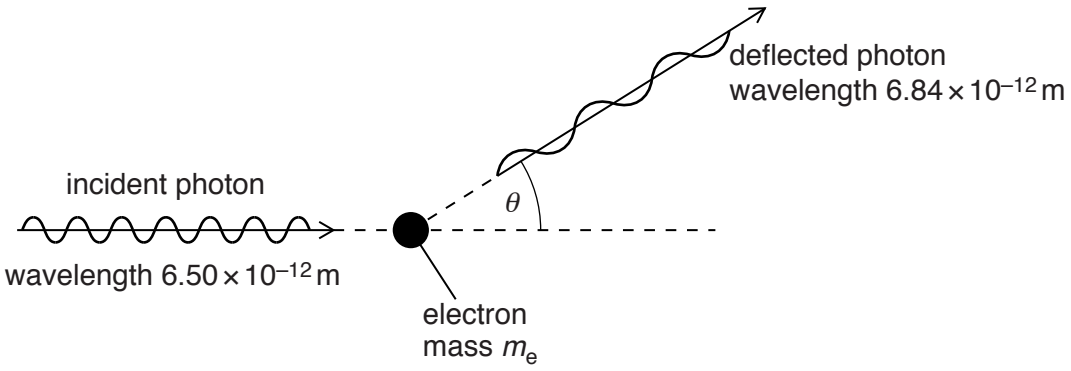

Fig. 8.1

The photon is deflected elastically by the electron of mass m_e. The wavelength of the deflected photon is 6.84×10^{-12} m.

(a) Calculate, for the incident photon,

(i) its momentum,

momentum = ... N s [2]

(ii) its energy.

energy = ...J [2]

(b) The angle θ through which the photon is deflected is given by the expression

$$\Delta\lambda = \frac{h}{m_e c}(1 - \cos\theta)$$

where $\Delta\lambda$ is the change in wavelength of the photon, h is the Planck constant and c is the speed of light in free space.

(i) Calculate the angle θ.

θ = ... ° [2]

(ii) Use energy considerations to suggest why $\Delta\lambda$ must always be positive.

.....

.....

.....

..... [3]

9 **(a)** An isotope of an element is radioactive. Explain what is meant by *radioactive decay*.

.....

.....

.....

..... [3]

(b) At time t, a sample of a radioactive isotope contains N nuclei. In a short time Δt, the number of nuclei that decay is ΔN.

State expressions, in terms of the symbols t, Δt, N and ΔN for

(i) the number of undecayed nuclei at time $(t + \Delta t)$,

number = ... [1]

(ii) the mean activity of the sample during the time interval Δt,

mean activity = ... [1]

(iii) the probability of decay of a nucleus during the time interval Δt,

probability = ... [1]

(iv) the decay constant.

decay constant = ... [1]

© UCLES 2015

(c) The variation with time t of the activity A of a sample of a radioactive isotope is shown in Fig. 9.1.

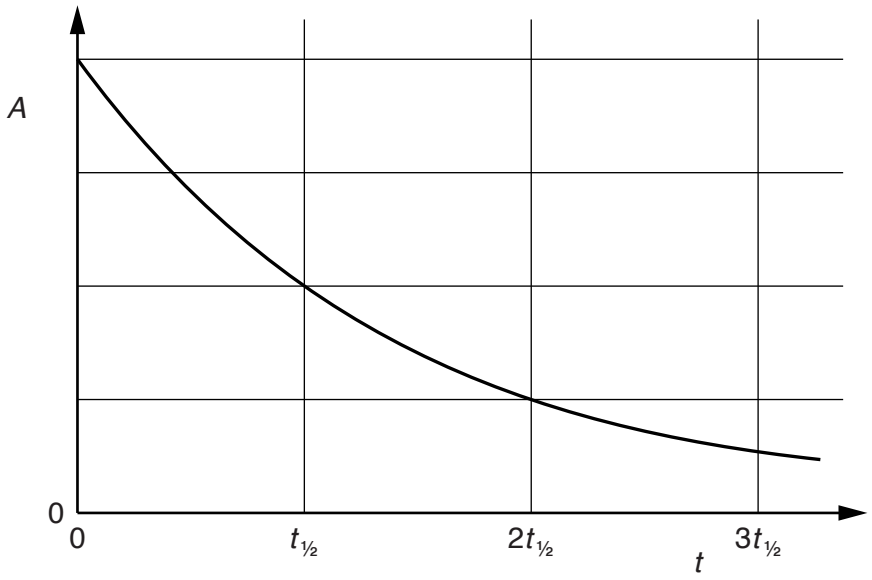

Fig. 9.1

The radioactive isotope decays to form a stable isotope S. At time $t = 0$, there are no nuclei of S in the sample.

On the axes of Fig. 9.2, sketch a graph to show the variation with time t of the number n of nuclei of S in the sample.

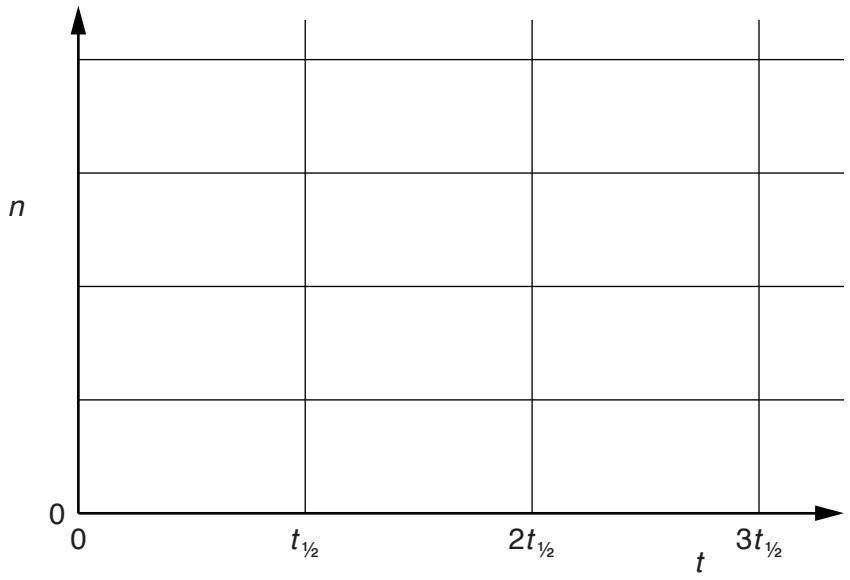

Fig. 9.2

[2]

Section B

Answer **all** the questions in the spaces provided.

10 An operational amplifier (op-amp) is used in the comparator circuit of Fig. 10.1.

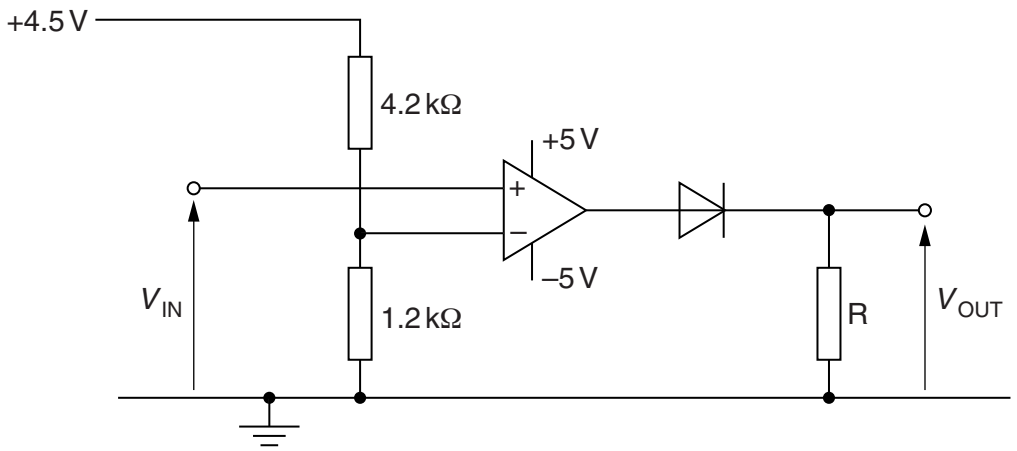

Fig. 10.1

(a) (i) Show that the potential at the inverting input of the op-amp is +1.0 V.

[1]

(ii) Explain why the potential difference across resistor R is + 5 V when V_{IN} is greater than 1.0 V and is zero when V_{IN} is less than 1.0 V.

V_{IN} > 1.0 V: .....

.....

.....

V_{IN} < 1.0 V: .....

.....

.....

[4]

(b) The variation with time t of the input voltage V_{IN} is shown in Fig. 10.2.

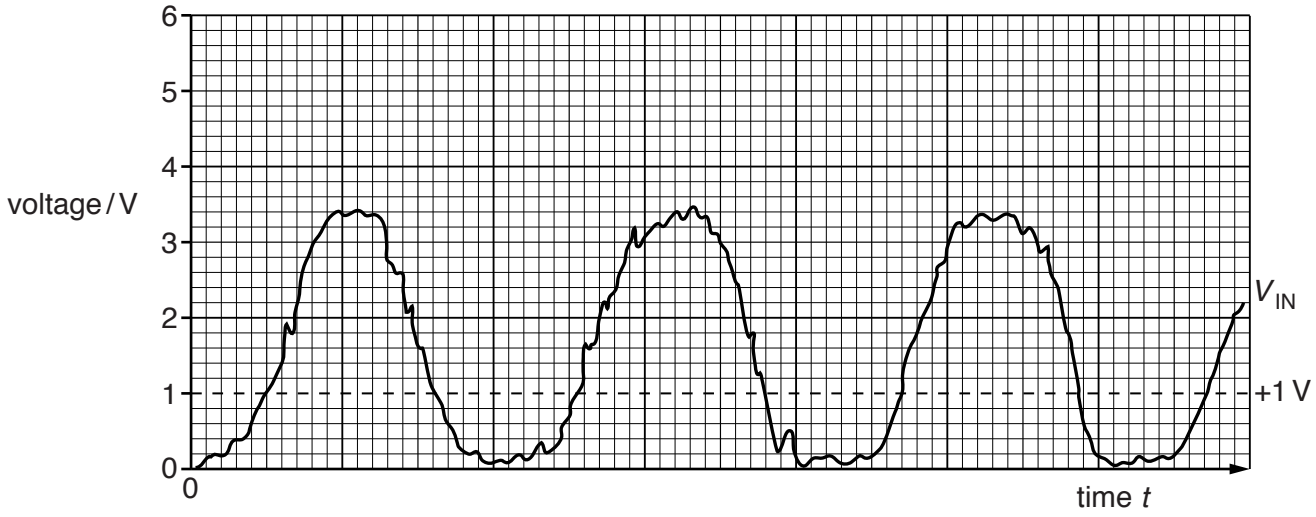

Fig. 10.2

(i) On the axes of Fig. 10.2, draw the variation with time t of the output potential V_{OUT}. [2]

(ii) Suggest a use for this type of circuit.

.....

..... [1]

11 (a) State and explain how, in an X-ray tube, the hardness of the X-ray beam is controlled.

.....

.....

.....

..... [3]

(b) A parallel beam of X-rays has intensity I_0 and is incident on a medium having a linear absorption (attenuation) coefficient μ.

(i) State an equation for the variation of the intensity I with the thickness x of the medium.

..... [1]

(ii) Data for the linear absorption (attenuation) coefficient μ for an X-ray beam in blood and in muscle is shown in Fig. 11.1.

	μ/cm^{-1}
blood	0.23
muscle	0.22

Fig. 11.1

Suggest why, if this X-ray beam is used to image blood vessels in muscle, contrast on the image would be poor.

.....

.....

..... [2]

© UCLES 2015

12 (a) Information may be carried by means of various channels of communication.

Name examples, one in each case, of devices where information is carried to the device using

(i) a wire pair,

..... [1]

(ii) a coaxial cable,

..... [1]

(iii) microwaves.

..... [1]

(b) State two advantages of optic fibres as compared with coaxial cables for long-range communication.

1. .....

2. .....
[2]

(c) An optic fibre has length 62 km and an attenuation per unit length of 0.21 dB km^{-1}.
The input power to the fibre is P. At the receiver, the noise power is 9.2 μW.
The signal-to-noise ratio at the receiver is 25 dB.

(i) Calculate the ratio, in dB, of the input power P to the noise power at the receiver.

ratio = ... dB [2]

(ii) Use your answer in **(i)** to determine the input power P.

P = ... W [2]

13 During magnetic resonance imaging to obtain information about internal body structures, a large constant magnetic field is used with a calibrated non-uniform magnetic field superimposed on it.

(a) State and explain the purpose of

(i) the large constant magnetic field,

.....

.....

..... [2]

(ii) the non-uniform magnetic field.

.....

.....

.....

..... [3]

(b) The de-excitation energy E (measured in joule) of a proton in magnetic resonance imaging is given by the expression

$$E = 2.82 \times 10^{-26} B$$

where B is the magnetic flux density measured in tesla.
The energy E is emitted as a photon of electromagnetic radiation in the radio-frequency range.

Calculate the magnetic flux density required for the radio frequency to be 42 MHz.

magnetic flux density = ... T [2]

Permission to reproduce items where third-party owned material protected by copyright is included has been sought and cleared where possible. Every reasonable effort has been made by the publisher (UCLES) to trace copyright holders, but if any items requiring clearance have unwittingly been included, the publisher will be pleased to make amends at the earliest possible opportunity.

To avoid the issue of disclosure of answer-related information to candidates, all copyright acknowledgements are reproduced online in the Cambridge International Examinations Copyright Acknowledgements Booklet. This is produced for each series of examinations and is freely available to download at www.cie.org.uk after the live examination series.

Cambridge International Examinations is part of the Cambridge Assessment Group. Cambridge Assessment is the brand name of University of Cambridge Local Examinations Syndicate (UCLES), which is itself a department of the University of Cambridge.